COPY RIGHT & CONFIDENTIAL
This document is the exclusive property of BEML and contains confidential information. This document or its contents shall not be used,reproduced or disclosed in whole or in part,without prior written permission of BEML. This document and all its copies shall be returned to BEML on demand.

DRG. NO. 2117AEFK235B

MACHINING DEVIATIONS FOR LINEAR DIMENSIONS										
ABOVE / UP TO AND INCLUDING	– / 6	6 / 30	30 / 120	120 / 315	315 / 1000	1000 / 2000	2000 / 4000	4000 / –	THE REST	——
VALUE	±0.1	±0.2	±0.3	±0.5	±0.8	±1.2	±2	±3		

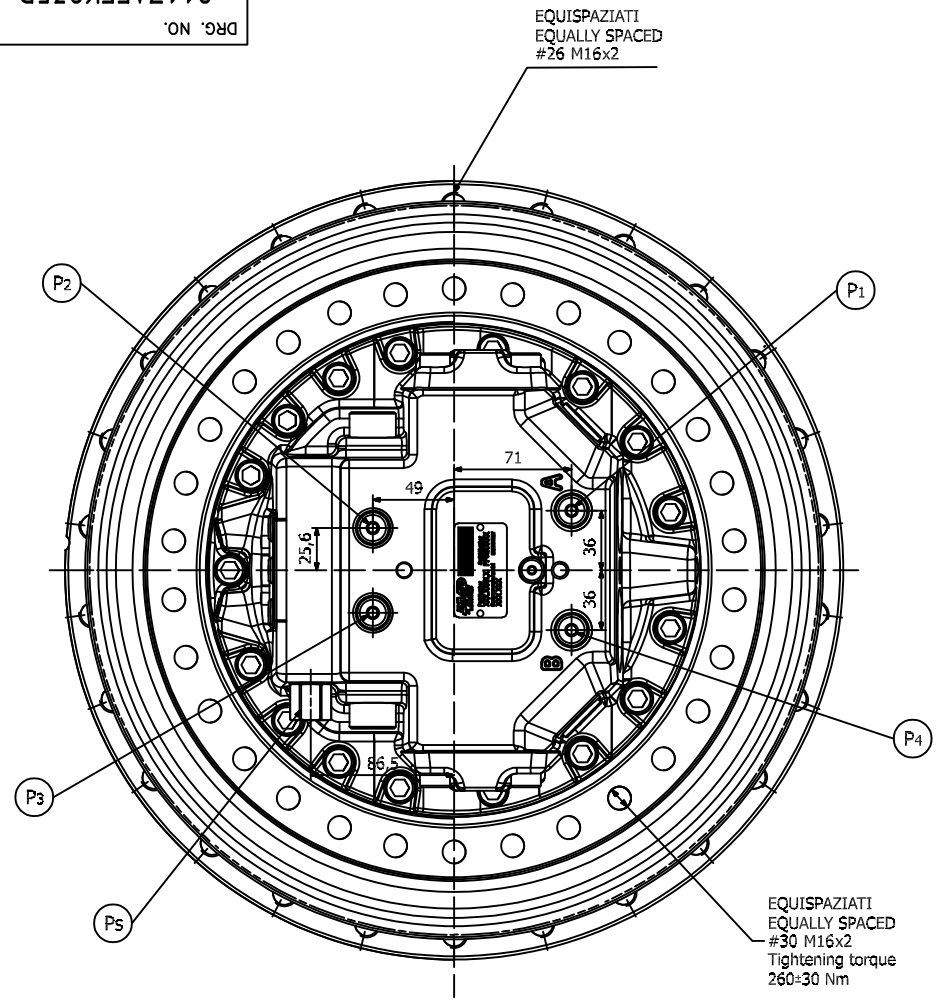

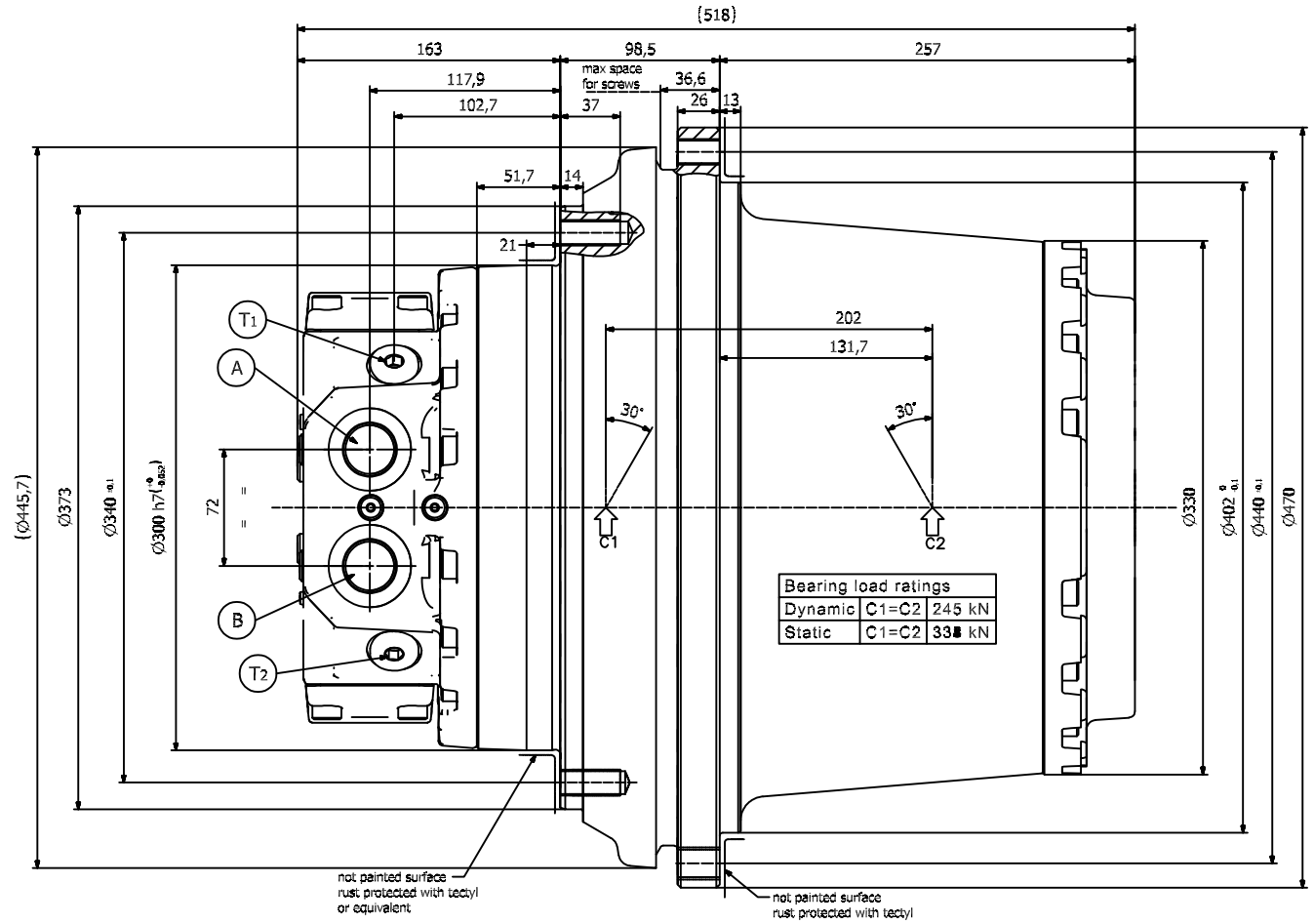

Bearing load ratings		
Dynamic	C1=C2	245 kN
Static	C1=C2	338 kN

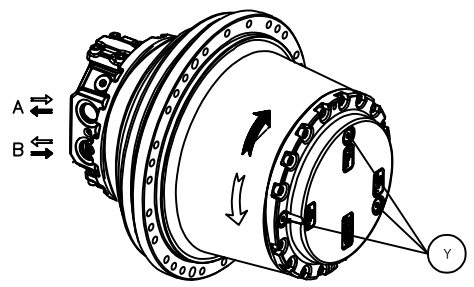

DESCRIZIONE PORTE/PORT DESCRIPTION		
A; B	Alimentz. motore / Motor port	G1" JIS B2351
T1 ; T2	Drenaggi / Drain port *	G1/2" JIS B2351
P1 ; P4	Porte manometri / Pressure gauge port	G1/4" ISO 1179
P2 ; P3	Porte manometri / Pressure gauge port	G1/4" ISO 1179
Ps	cambio velocità / two speed control port **	G1/4" JIS B2351
Y	Tappi olio anteriori /Front oil plugs	M18x1.5

* Collegare il drenaggio alla porta più alta / Connect drain hose to upper port

** usare lo stesso olio del circuito idraulico del motore / use the same oil of the hydraulic motor circuit

PORTE JIS B2351 / JIS B2351 PORTS						
a	b	c	d	e	f	g
G 1"	35.8	51	2.5	3.5	25	30
G 1/2"	22.6	34	2.5	2.5	19	24
G3/8"	18.6	28	2.0	2.5	15	18
G1/4"	15.6	24	1.5	2.5	15	18

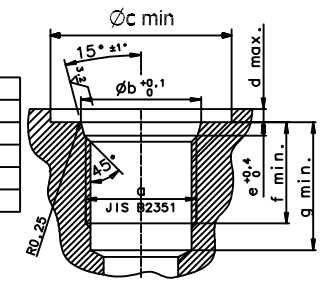

PORTE ISO 1179 / ISO 1179 PORTS					
a	b	c	d	e	f
G 1/2"	21	30	2.5	15	18
G1/4"	13.2	21	1.5	12	15

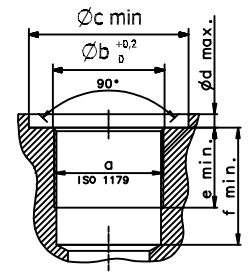

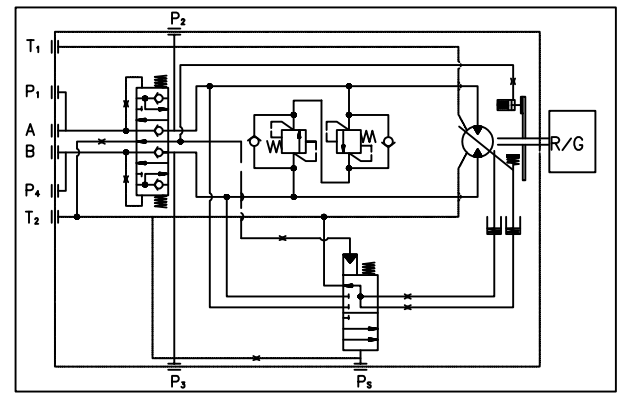

TRAVEL MOTOR SPECIFICATIONS :

TECHNICAL DATA	
DISPLACEMENT (MAX–MIN)	137.9–80.7 CC/REV
MAX. PRESSURE	343 BAR
MAX. FLOW RATE	242 LPM
DRAIN PRESSURE (continuous–peak)	2–5 BAR
MAX. THEORETICAL PRESSURE (MAX–MIN DISPLACEMENT)	753–441 Nm
COUNTER BALANCE VALVE OPENING PRESSURE (START–COMPLETE)	6–13 BAR
2 SPEED CONTROL PRESSURE (MIN–MAX)	20–70 BAR
DUAL SPEED AUTOMATIC SHIFT PRESSURE (40 /32 BAR PILOT PR.)	300–230 BAR

BRAKE TECHNICAL DATA :

BRAKE TORQUE AT MOTOR SHAFT	650±10% Nm
BRAKE RELEASE PRESSURE FOR COMPLETE DISENGAGEMENT	12.5 BAR

GEAR BOX SPECIFICATIONS :

TECHNICAL DATA	
THEORETICAL MAXIMUM TORQUE	47.4–27.8 KNm
THEORETICAL MAXIMUM OUTPUT SPEED	27.9–47.8 RPM
BRAKING TORQUE AT SPROCKET	40950 Nm (+/–10%)
REDUCTION RATIO	63
GEARBOX OIL	SAE80W90 APIGL5
MOTOR GEARBOX WEIGHT	245 Kg
GEARBOX OIL QUANTITY	3.4 LTRS

NOTE:

1. THIS TRAVEL DRIVE IS PROPRIETARY ITEM PURCHASED FROM M/s PMP.

NEXT ASSY. 156 FD 01112

USED ON	QTY	MATL:
BE220G	02	ASSY

H.T. --
S.T. --

PRODUCT: EXCAVATOR
DESIGN REF. –

15600316	AMEND NO.	SIGNATURE	DATE
DRA/ECN	NAME		
APPROVED	SURESH HG		04.11.2024
REVIEWED	PRAVEEN BG		04.11.2024
CHECKED	RAMU.A	–SD–	04.11.2024
DRAWN	MANIKANDAN		04.11.2024
STDS.	SHIVALINGA SWAMY		04.11.2024

TITLE: TRACK DRIVE

Wt. in kg ~245 | SCALE 1:5
SHEET NO. 1 | NO. OF SHEETS 1

BEML LIMITED KGF
NEW FRONTIERS NEW DREAMS

DRG. NO. 2117AEFK235B

12117AEFK235B.DWG